vPad-Rugged 2™ Quick Start Guide

Package Contents:
- SAFETY ANALYZER (vPad-Rugged 2)
- KELVIN CABLE (3140-475)
- POWER CORD (3000-0*xx*)

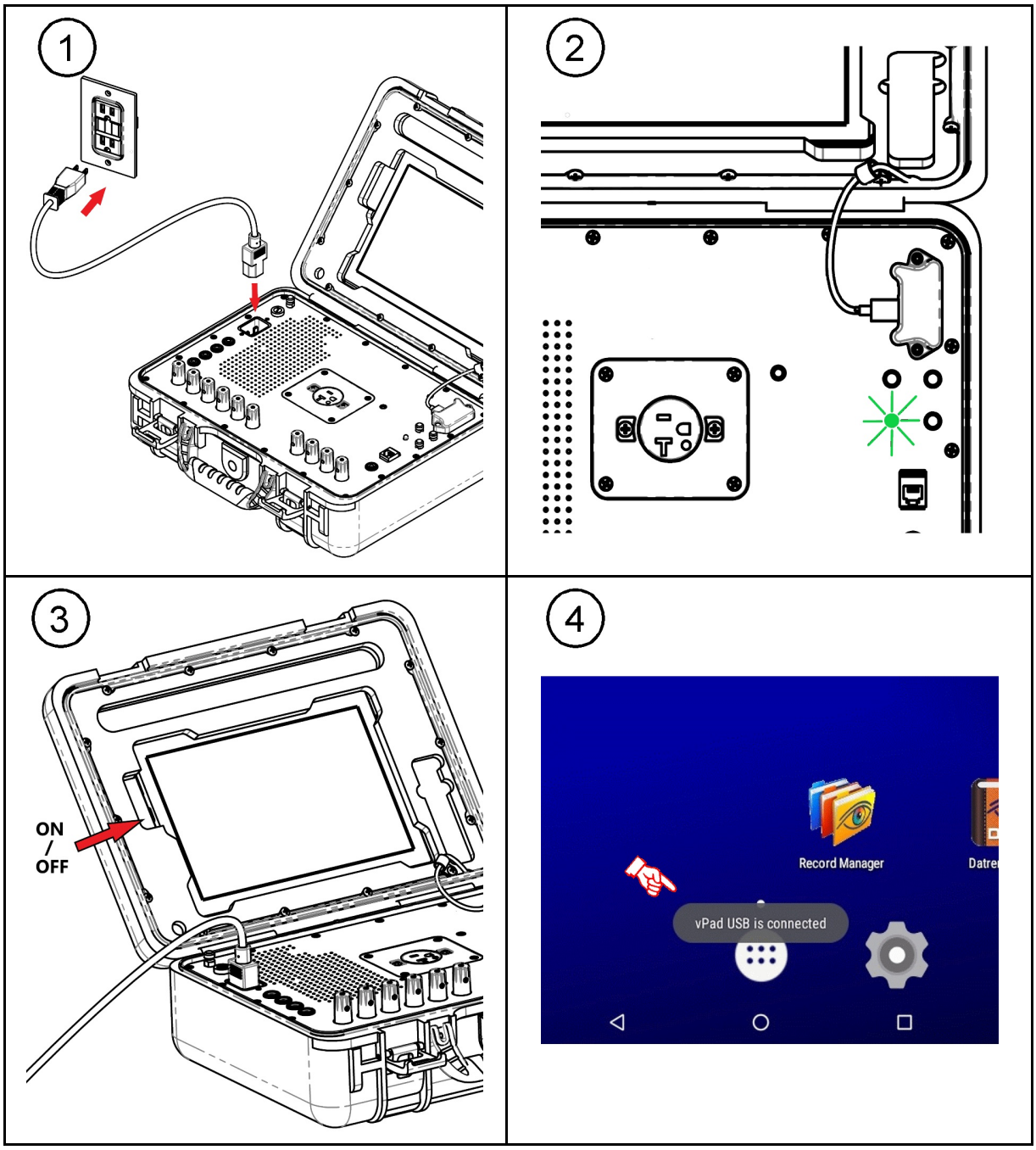

Datrend Systems Inc.
130- 4020 Viking Way, Richmond, BC, Canada V6V 2L4
Phone: 604-291-7747 Fax: 604-294-2355 Toll Free: 1-800-667-6557
E-mail: customerservice@datrend.com Web: www.datrend.com

MN-135a 6100-140 vPad-Rugged 2 Safety Analyzer QSG 2018-Nov-22

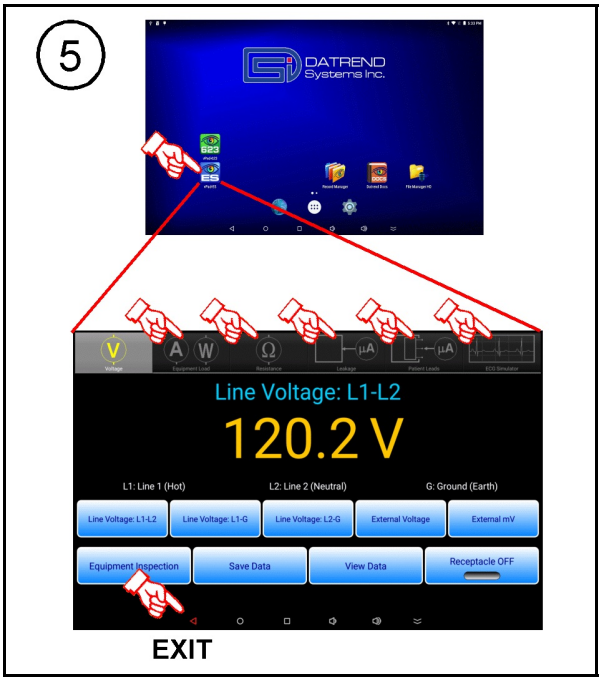

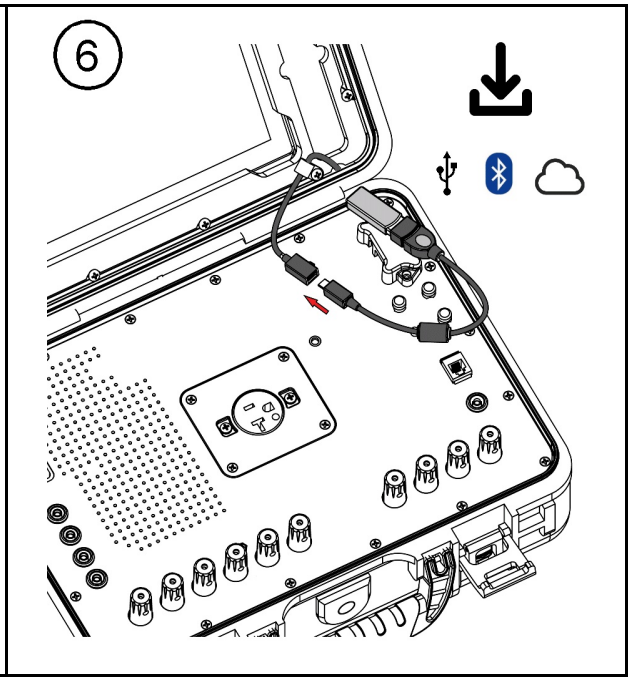

Datrend Systems Inc.
130- 4020 Viking Way, Richmond, BC, Canada V6V 2L4
Phone: 604-291-7747 Fax: 604-294-2355 Toll Free: 1-800-667-6557
E-mail: customerservice@datrend.com Web: www.datrend.com